Part I: Common source amplifier with active PMOS load

Hand Calculations :

Lab 2 Analog IC Design Fall 2024: Common Source and Cascode Amplifiers

Objective of the Lab

The objective of this lab is to design, analyze, and evaluate the performance of two amplifier types: the common source amplifier and the cascode amplifier. The amplifiers are designed using a CMOS TSMC 0.25µm process to meet specific performance metrics such as gain, bandwidth, and power consumption.

Common Source Amplifier

Part I: Common source amplifier with active PMOS load Design a common source amplifier that satisfies the following performance requirements. - Spec: IDS3 MHz, power consumption < 1mW - Vdd= 2 V - Output cap load CL=2 pF • Tasks: o Design and analysis o Perform DC, AC, transient simulations. o Plot Vout vs Vin and to get DC operating point and gain approximation. o Comparison with hand calculations and conclusions

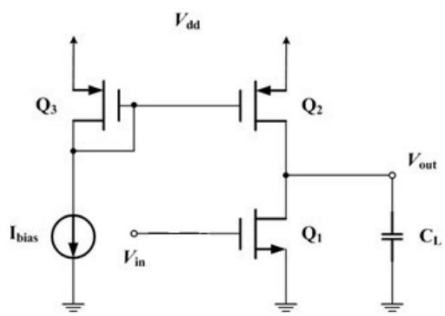

1. **Common Source Amplifier**
    - IDS < 0.5 mA
    - Gain ≥ 30 dB
    - Output Signal Swing ≥ 1.6 V
    - Bandwidth > 3 MHz
    - Power Consumption < 1 mW
    - Supply Voltage (Vdd) = 2 V
    - Output Capacitance Load (CL) = 2 pF

1. Circuit Diagram

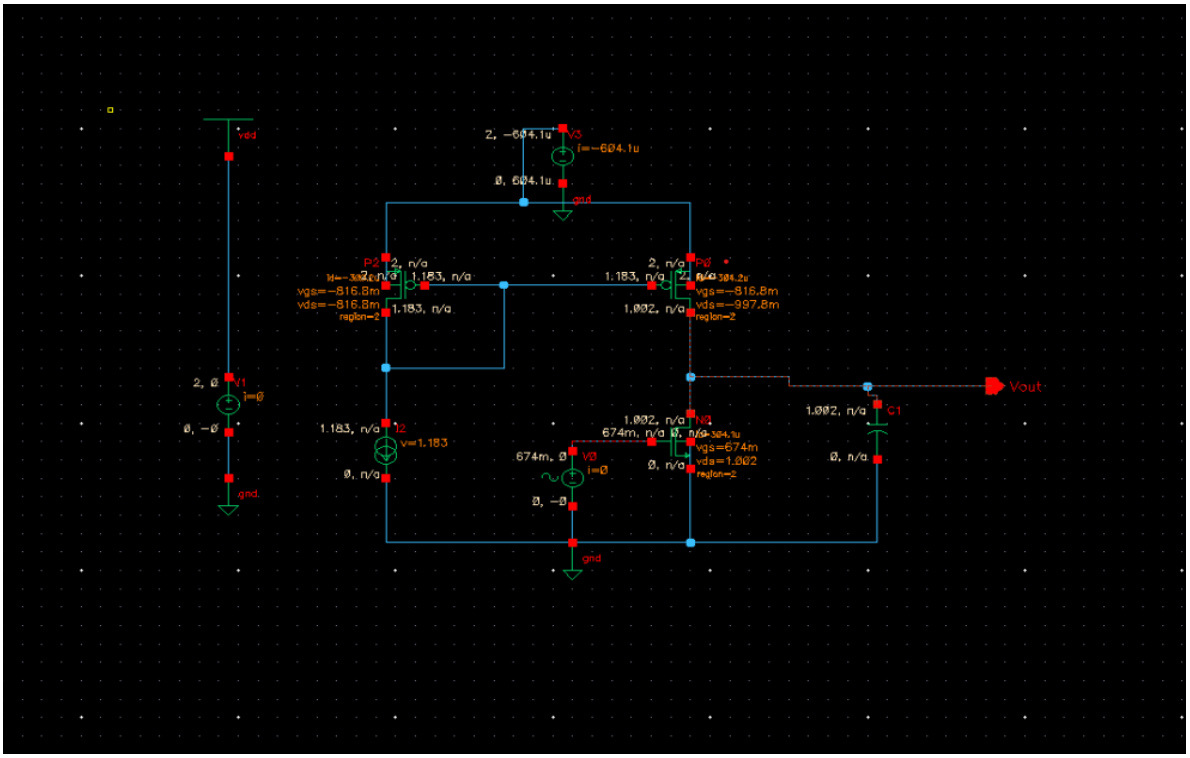

Simulation Results

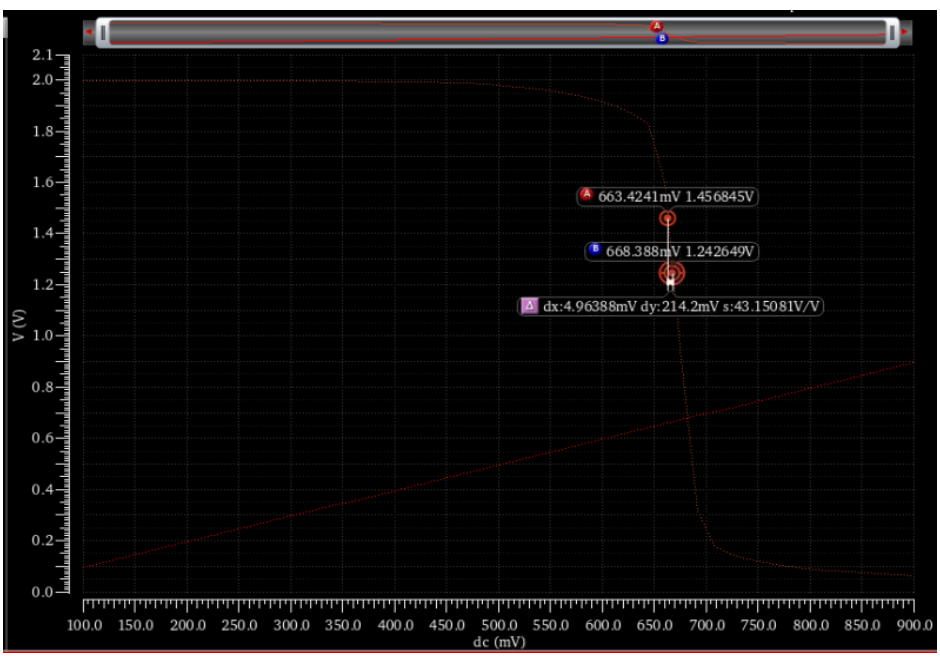

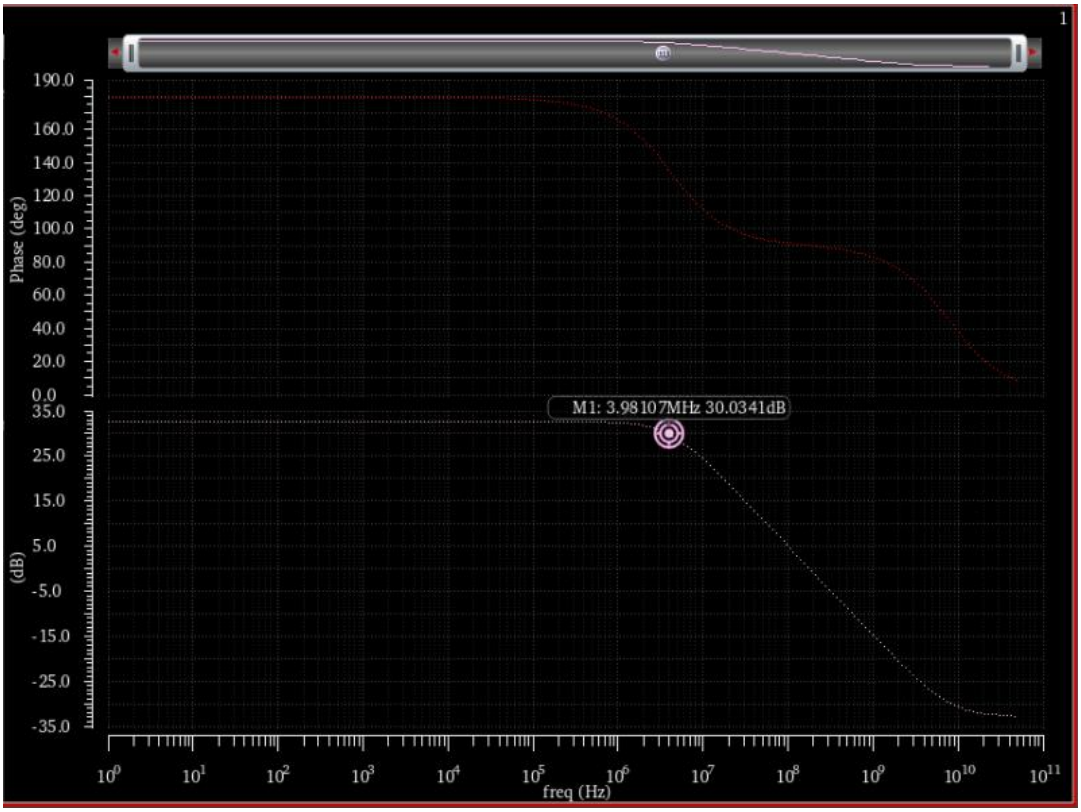

3.1 DC Operating Point Analysis

Plots

:

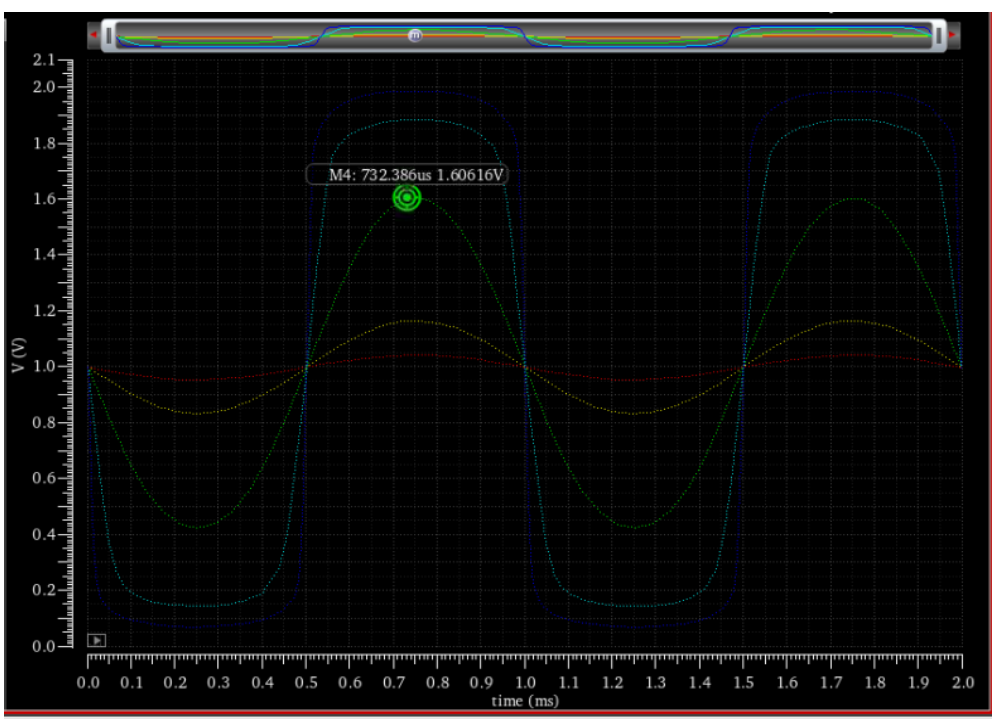

Plot Vout vs. Vin to determine the DC operating point.

3.4 Distortion Analysis

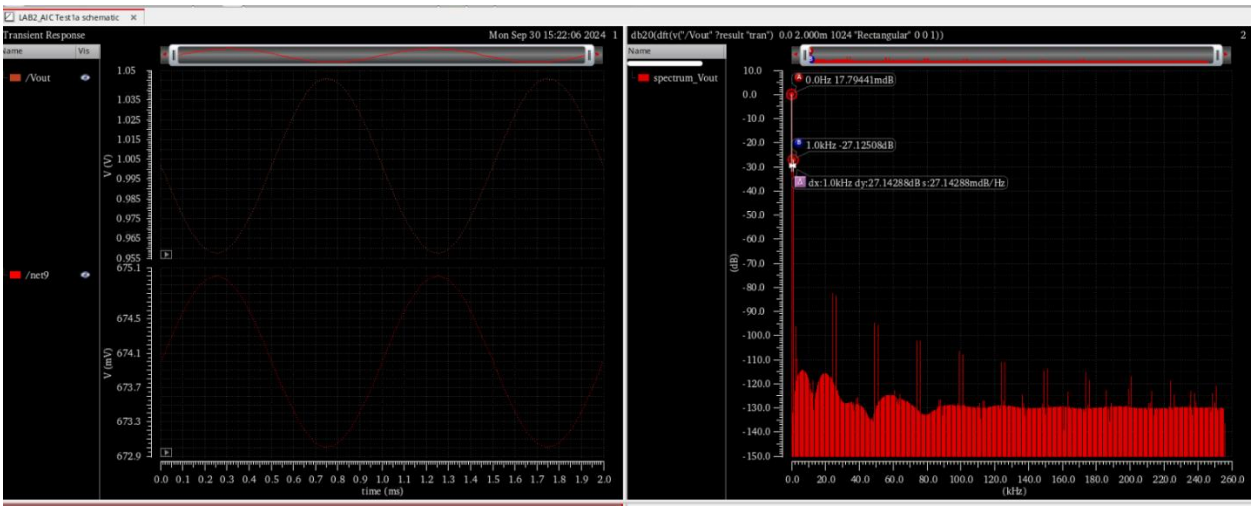

Spectrum plot for input and output

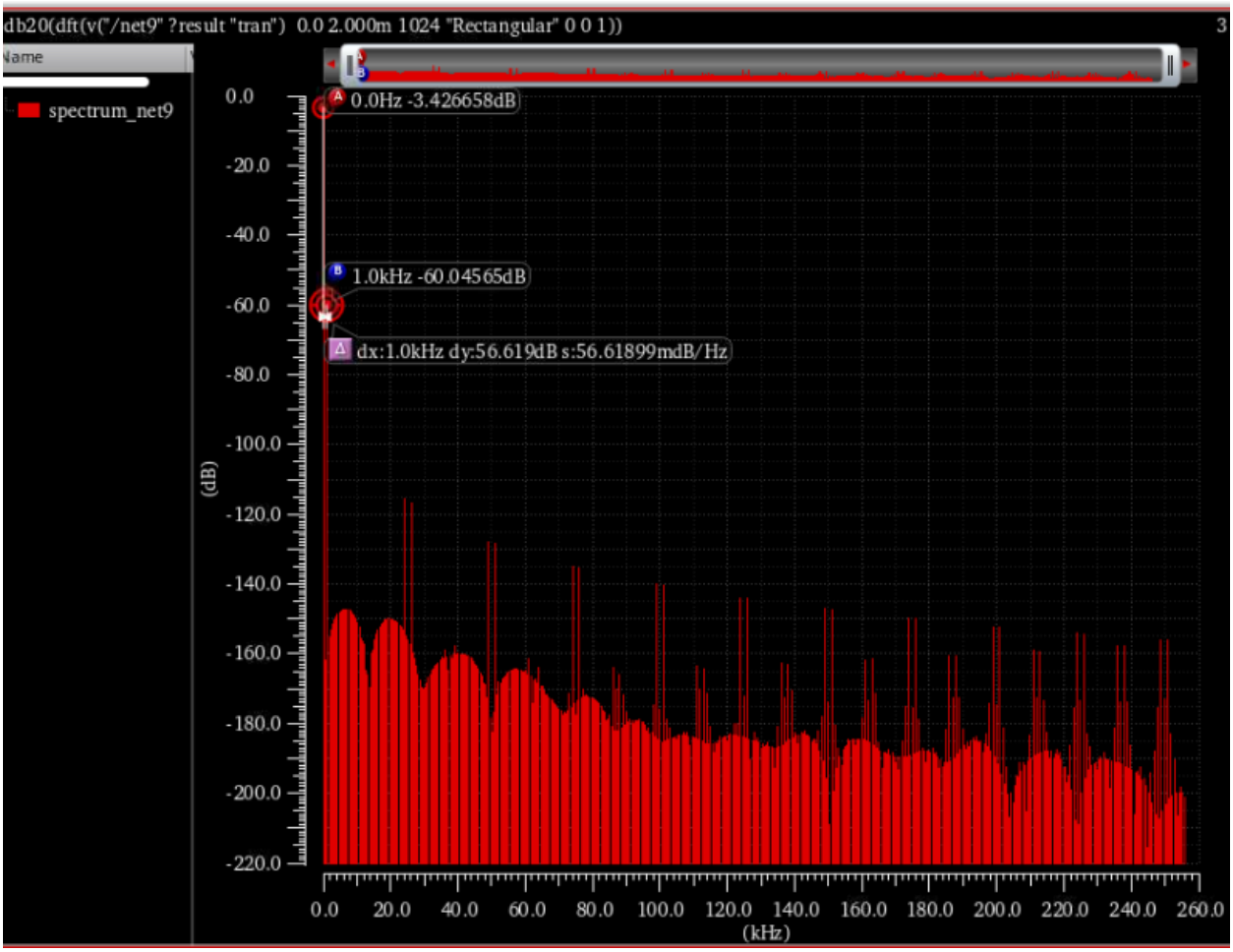

Distortion analysis

The plot shows that greater harmonics are connected to the output, which increases distor tion; this is primarily because of the gain.
We will witness a lot of them since a rectangular signal is the sum of many sinusoidal signa l components, which is the best explanation for the higher frequency spectrum peaks that have been recorded.
Power Consumption: The Vdd supply uses 100uA of electricity at a voltage of 2V.
The formula for power utilization is Vdd * Id = 2 * 100 uA = 200 uW.

Hand Calculations

10:45 PM Mon Sep 30 34%

Hand Calculation

Consider $I_d = 300\mu A$; $I_{DS} < 0.5\ mA$

given :- $K_n' = 2.475 \times 10^{-4}\ A/V^2$

$K_p' = 0.9575 \times 10^{-4}\ A/V^2$

$V_{Thn} = 0.49\ V$

$V_{Thp} = 0.54\ V$

$C_L = 1.5\ pF$, $L = 600\ nm$

For pmos :-

$$I_d = \frac{1}{2} \mu_p C_{ox} \left(\frac{W}{L}\right) (V_{ov})^2$$

$$300 = \frac{1}{2} \times 0.957 \times 10^{-4} \times \left(\frac{W_p}{600 \times 10^{-9}}\right) \times (0.2)^2$$

$$\frac{300 \times 10^{-6} \times 600 \times 10^{-9} \times 2}{0.957 \times 10^{-4} \times (0.2)^2} = W_p$$

$$w_p = 940.43 \times 10^{-7}$$

$$\boxed{w_p = 9.4.7\ \mu m}$$

For Nmos :-

$$I_D = \frac{1}{2} \mu_n C_{ox} \left(\frac{W}{L}\right) (V_{ov})^2$$

$$300 \times 10^{-6} = \frac{1}{2} \times (2.747 \times 10^{-4}) \left(\frac{w_n}{600 \times 10^{-9}}\right) (V_{ov})^2$$

$$w_n = \frac{3 \times 10^{-4} \times 2 \times 600 \times 10^{-9}}{2.747 \times 10^{-4} \times (0.2)^2}$$

$$w_n = 32763 \times 10^{-9}$$

$$\boxed{w_n = 32.7 \mu m}$$

$$V_{ov} = V_{GS} - V_{tn}$$

$$V_{GS} = V_{ov} + 0.49$$

$$\boxed{V_{GS} = 0.69\,V}$$

Gain Calculation :-

$$g_m = \frac{2 I_D}{V_{OV}} = \frac{2 \times 300 \times 10^{-6}}{0.2} = 3000 \times 10^{-6} = 3000\,\mu A/V$$

As we have Considered the Value of I_D Same for PMOS & NMOS hence $V_{OV} = 0.2$ is Same for both

So

$$g_{m1} = g_{m2} = g_{m3} = 3000\,\mu A/V$$

Consider $\lambda = 0.1$

$$* \; r_{o_1} = r_{o_2} = \frac{1}{\lambda I_{DS}} = \frac{1}{0.1 \times 300 \times 10^{-6}}$$

$$= 3.33 \times 10^{4} \, \Omega$$

$$\text{Gain} = -g_{m_1} (r_{o_1} \| r_{o_2})$$

$$= -3000 \times 10^{-6} (3.33 \times 10^{4}) \| (3.33 \times 10^{4})$$

$$\Rightarrow -3000 \times 10^{-6} \times 1.665 \times 10^{4}$$

$$\Rightarrow -4.995 \times 10$$

$$\Rightarrow -49.95$$

$$\boxed{\text{Gain} \approx -50}$$

$$\text{Gain in dB} = 20 \log_{10} (50)$$

$$= 33.97 \, dB$$

$$\text{Gain} = 33.97 \, dB \geq 30 \, dB \text{ (given)}$$

Parameters	Simulation	Hand Calculation/ Analysis	Discussion on differences
Width	PMOS = 78.3u NMOS = 27.7u	PMOS= 94.7u NMOS= 32.7	
Length	600nm	600nm	
Vgs	0.69	0.69	
Gain	53.3 dB	49.97 dB	
I bias	98.5uA	500uA	
Rout	100uohm	100uohm	
gm	0.54mA/V	0.99A/V	

Part II: Cascode amplifier: Design a Cascode amplifier that satisfies the following requirements: - Spec: IDS 50 dB), output signal Swing ≥ 1.7V), Power Consumption < 1.25mW)and BW>150 KHz - Vdd=2.5V - Output cap load CL=1.5 pF

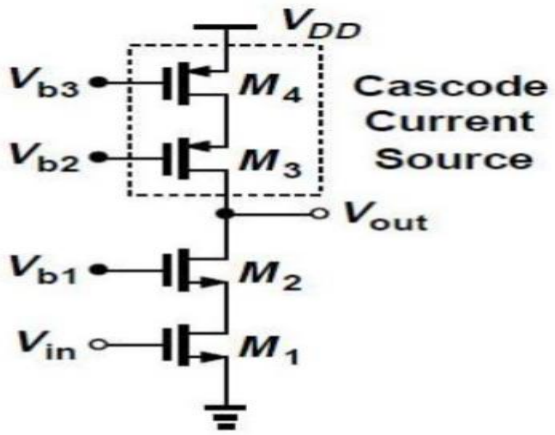

- **Cascode Amplifier**
  - IDS < 0.5 mA
  - Gain > 50 dB
  - Output Signal Swing ≥ 1.7 V
  - Bandwidth > 150 kHz
  - Power Consumption < 1.25 mW
  - Supply Voltage (Vdd) = 2.5 V
  - Output Capacitance Load (CL) = 1.5 pF

2. **1. Circuit Diagram**

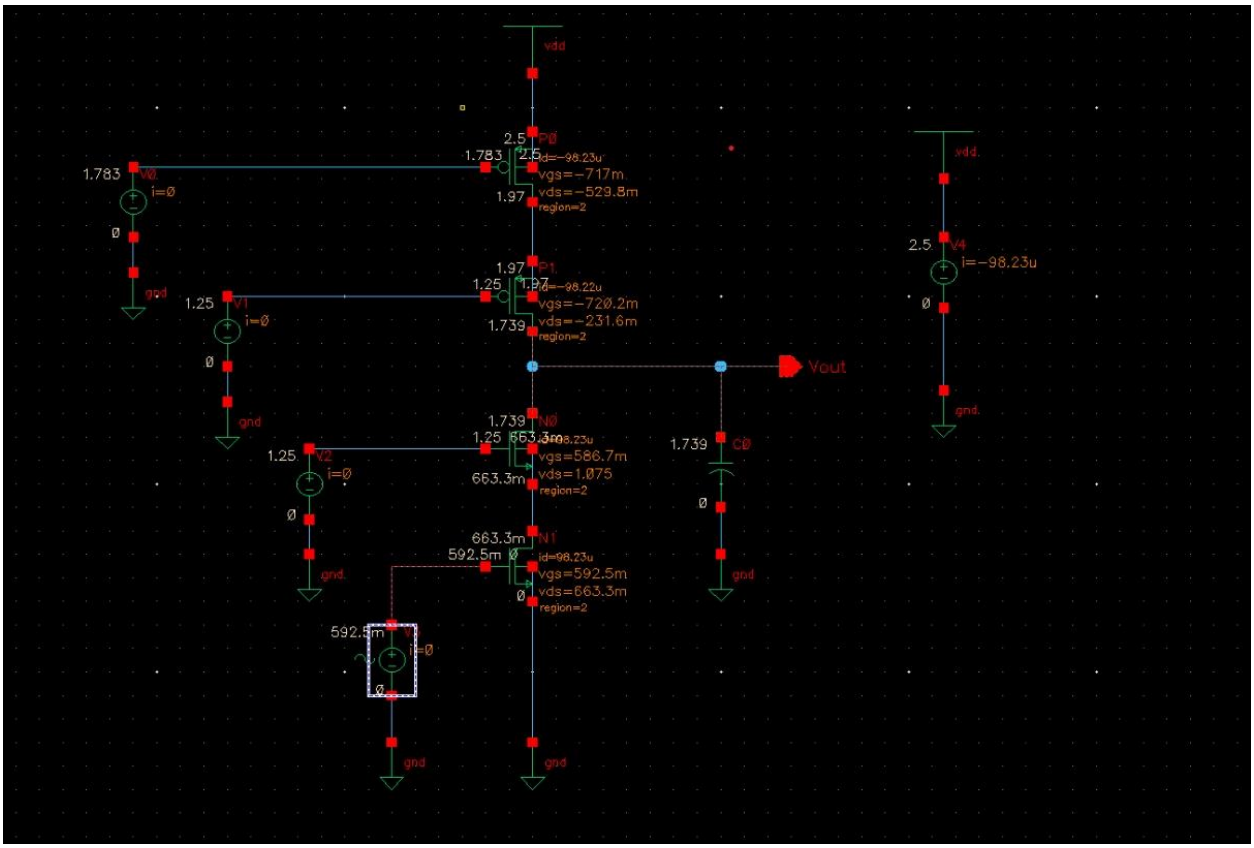

Schematic

Simulation Results

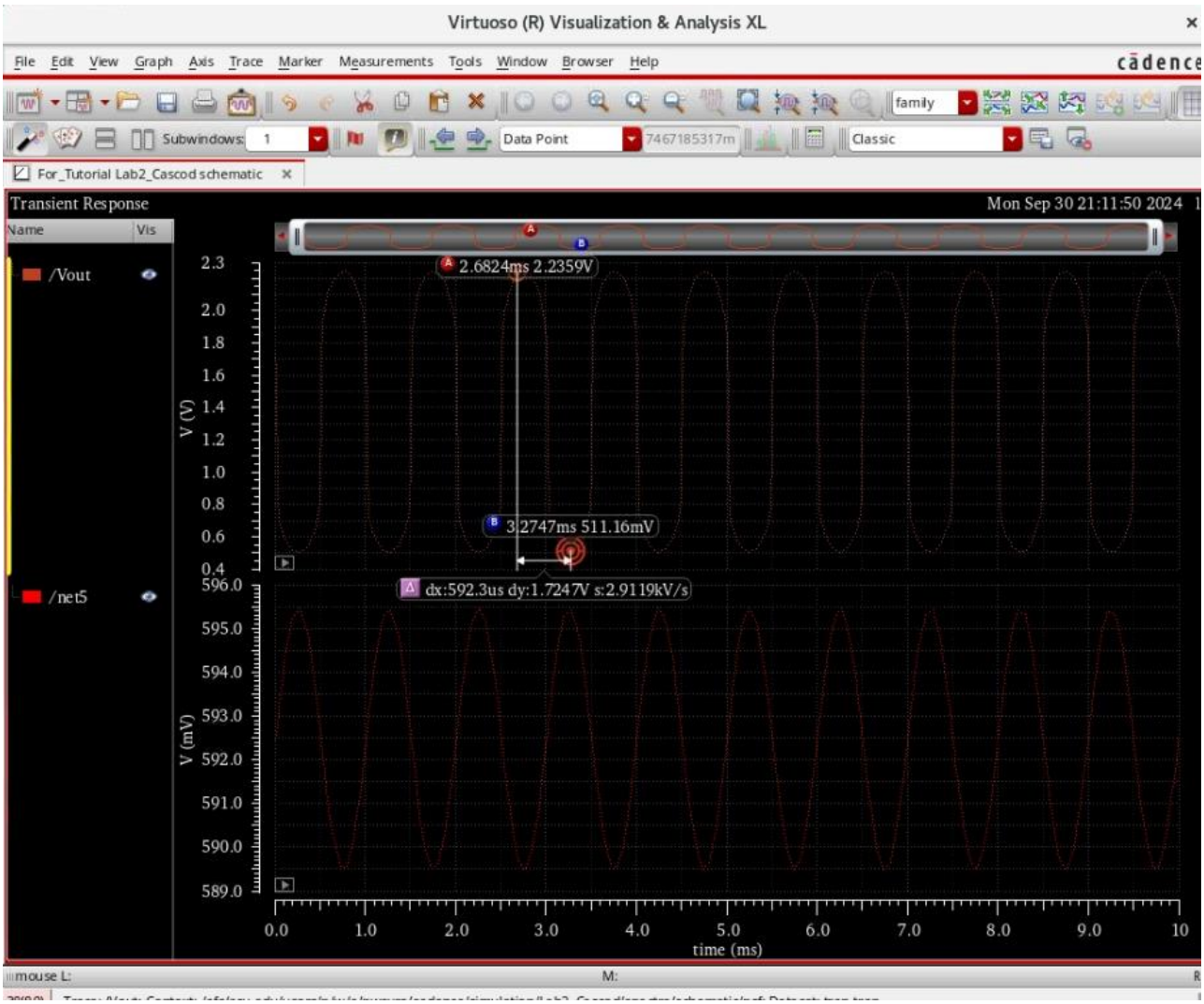

transient Analysis

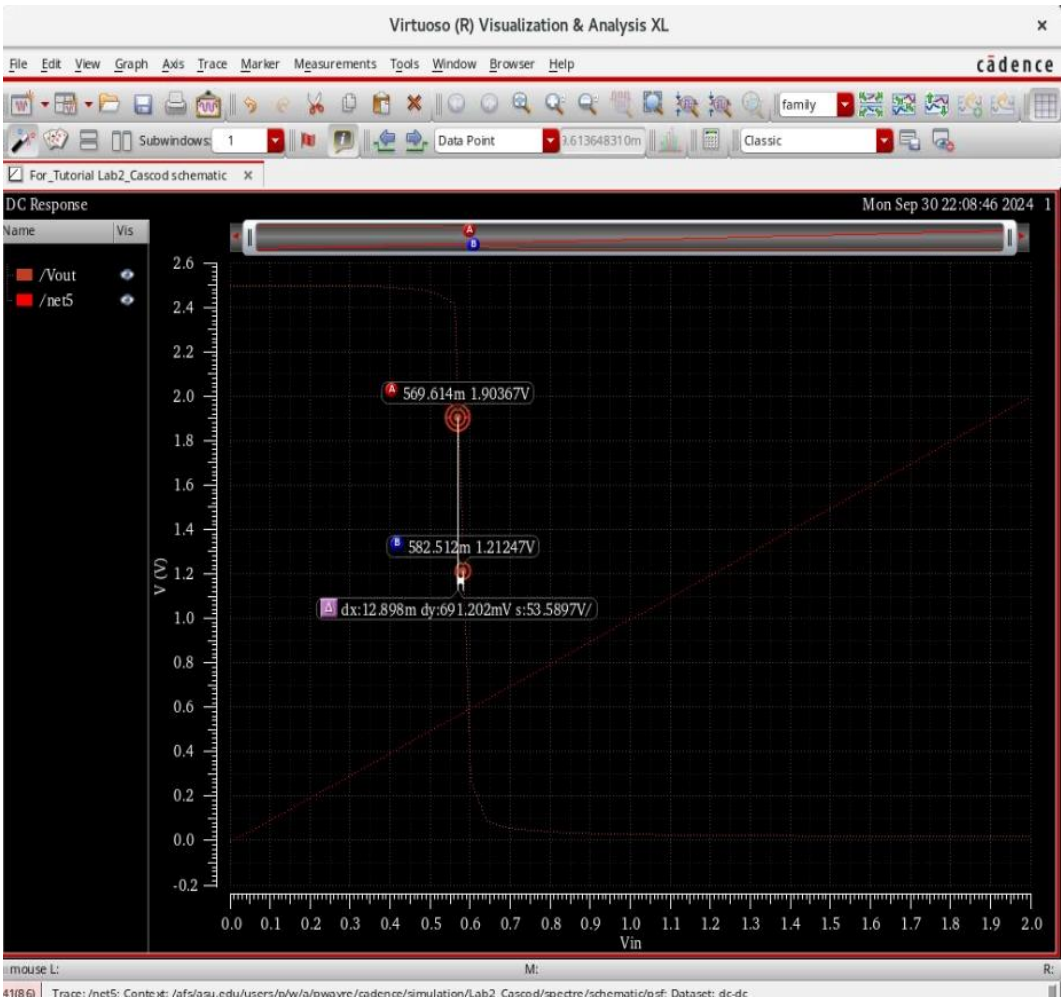
Virtuoso (R) Visualization & Analysis XL
File Edit View Graph Axis Trace Marker Measurements Tools Window Browser Help
cādence
Subwindows: 1
Data Point
Classic
For_Tutorial Lab2_Cascod schematic
DC Response
Mon Sep 30 22:08:46 2024 1
Name
Vis
/Vout
/net5
569.614m 1.90367V
582.512m 1.21247V
dx:12.898m dy:691.202mV s:53.5897V/
V (V)
Vin
mouse L:
M:
R:

DC Analysis

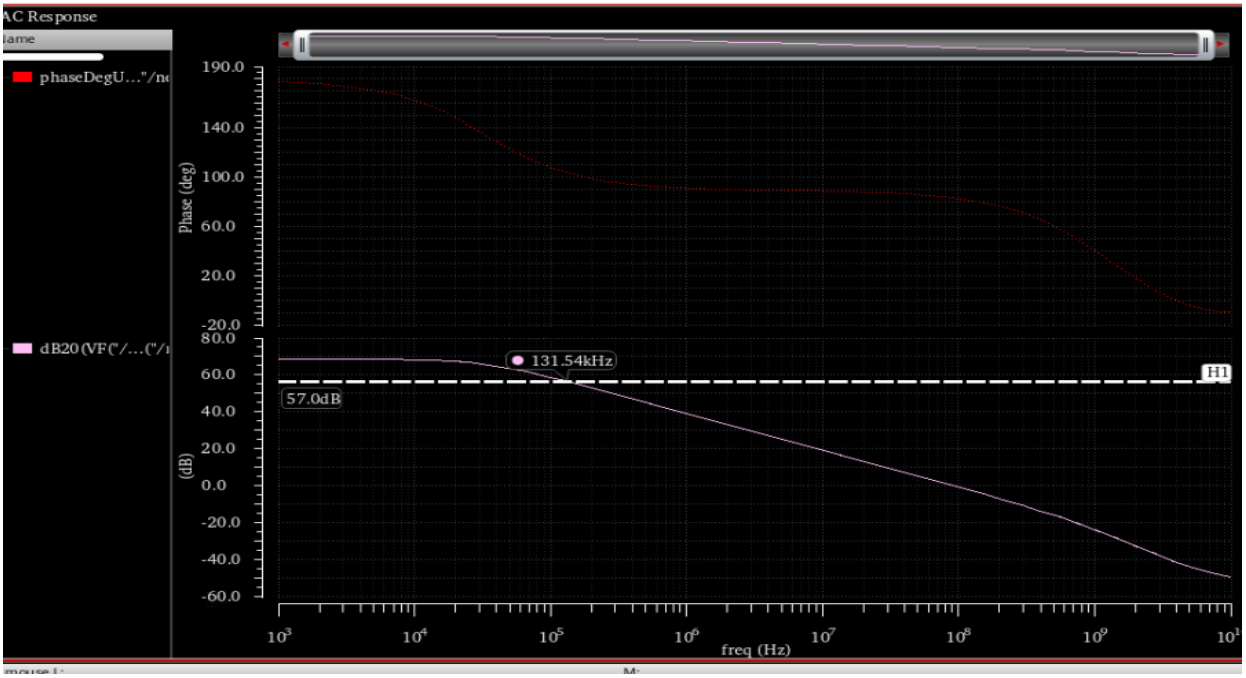

AC Gain vs Frequency and Phase vs Frequency

Gain = 57dB

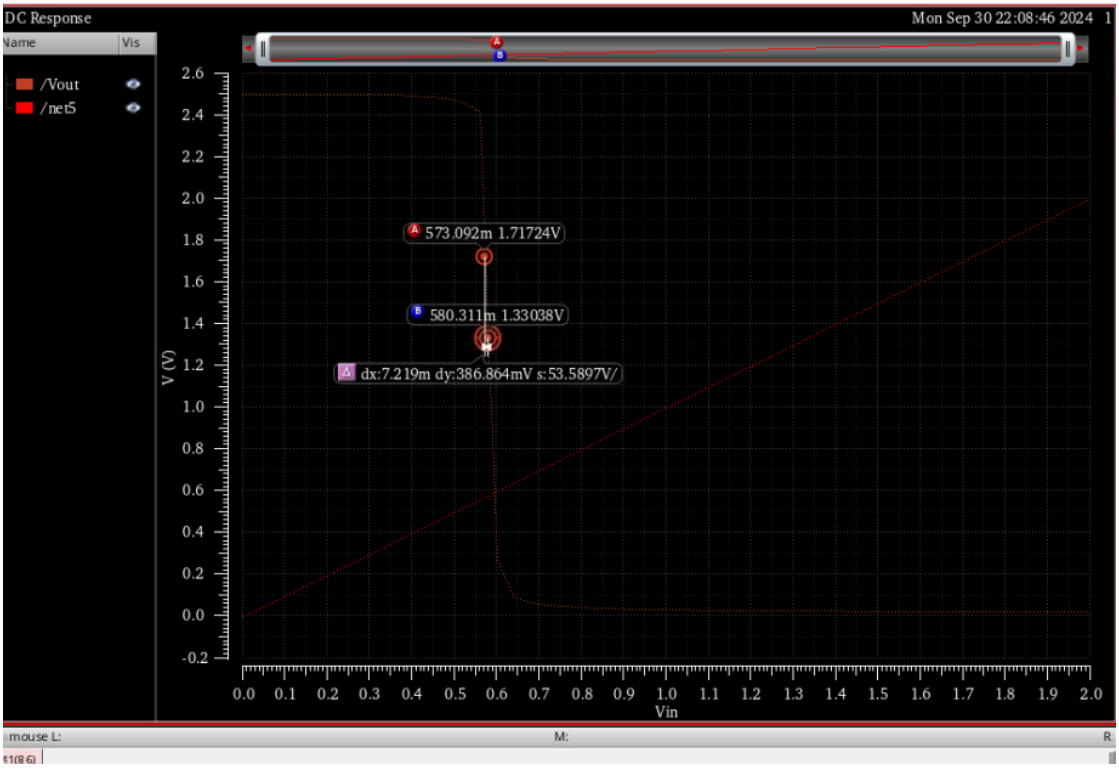

Vin vs vout graph

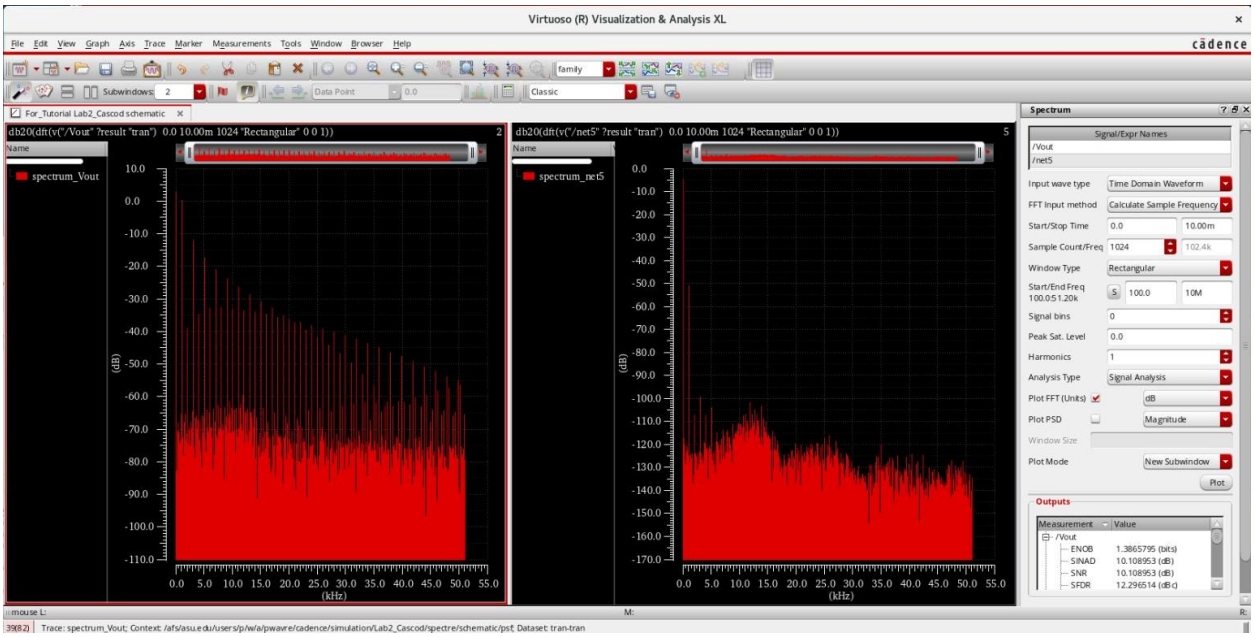

Frequency distortion

Hand Calculations:

2)

Consider $I_D = 100\,\mu A$ $\quad I_D < 0.5\,mA$

Given $I_{DS} < 0.5\,mA$, Gain $> 50\,dB$

Swing $\geq 1.7V$, Power Consumption $< 1.25\,mW$

Bandwidth $\geq 150\,KHz$

$V_{DD} = 2.5\,V$, Output $C_L = 1.5\,pF$

$V_{eff} = V_{ov} = 0.2\,V$

For Nmos:

$$I_D = \frac{1}{2} K_n' \left(\frac{W_n}{L}\right) (V_{ov})^2$$

$$W_n = \frac{2 I_D \times L}{K_n' \times V_{ov}^2} \rightarrow K_n' = 2.747 \times 10^{-4}\,A/V^2$$

$L = 600\,nm$

$$\boxed{W_n = 10.91\,\mu m}$$

For PMOS: $I_D = \frac{1}{2} K_p' \left(\frac{W_p}{L}\right) (V_{ov})^2$

$\hookrightarrow K_p' = 0.95 \times 10^{-4}$, $L = 600\,nm$

$$W_p = \frac{2 \times 100 \times 10^{-6} \times 600 \times 10^{-9}}{0.9575 \times 10^{-4} \times (0.2)^2}$$

$$\boxed{W_p = 31.33\ \mu m}$$

$$g_m = \sqrt{2 \times I_D \times \mu_n C_{ox} (W_n/L)}$$

$$g_m = \sqrt{2 \times 100 \times 10^{-6} \times 2.7475 \times 10^{-4} \times 18.16}$$

$$= 9.999 \times 10^{-4}$$

$$= 0.998\ mm\ A/V$$

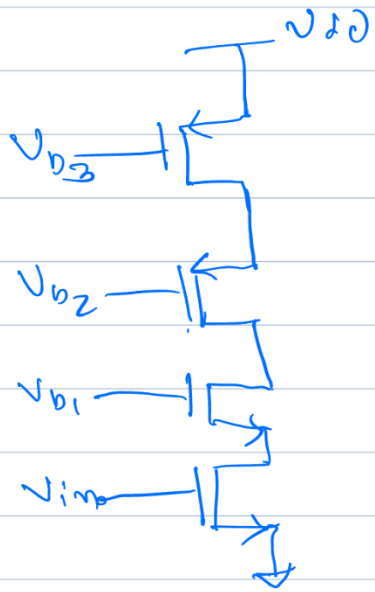

Now,
For Calculating gain

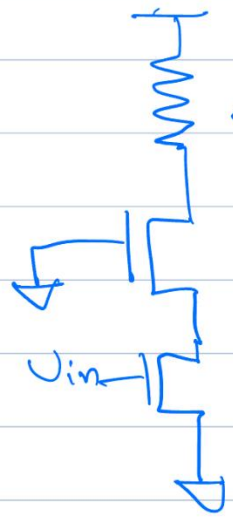

$r_o(1+g_{m3}r_{o3})r_{o4}$

$$I_{o/p} = g_m V_{in} \times \frac{r_{o1}}{(r_{o1}) + \left(\frac{1}{g_{m2}} \| r_{o2}\right)}$$

$$G_m = \frac{g_m r_{o1}}{r_{o1} + 1/g_{m2}}$$

$$\boxed{G_m \approx g_{m1}}$$

$$A_v = -g_m R_{out}$$

$$g_{m2} = \sqrt{2 I_D \times W/L \times K_n'}$$

$$= \sqrt{2 \times 100 \times 10^{-6} \times 2.747 \times 10^{-4}}$$

$$g_{m2} \Rightarrow 1.68 \times 10^{-3} \, A/V$$

r_o Values from Calculations

$$r_o = \frac{1}{\lambda I_D} = \frac{1}{0.1 \times 100 \times 10^{-6}}, \quad \lambda = 0.1$$

$$r_o = 100 K\Omega$$

$$\text{Gain} = g_m \times (r_{o1} \| r_{o2})$$

$$= 0.9989 \times 10^{-3} (100K\Omega \| 100K\Omega)$$

$$\Rightarrow 0.9989 \times 10^{-3} \times 50$$

$$\boxed{\text{Gain} = -49.5}$$

Parameters	Simulation	Hand Calculation/ Analysis	Discussion on differences
Width	PMOS = 78.3u NMOS = 27.7u	PMOS= 94.7u NMOS= 32.7	
Length	600nm	600nm	
Vgs	0.69	0.69	
Gain	43.3 dB	33.97 dB	
I bias	512uA	500uA	
Rout	16.67kohm	16.6uohm	
gm	60.951uA/V	3000 uA/V	